Model-OM24000					
Gear ratio	481.4	Turns to close	120.4	Bore dia (max.)	125mm
Rated output torque	24000Nm	Rated input torque	129Nm	Stem bore depth (max.)	175mm
Mechanical advantage	186	Mounting base ISO 5211	F25,F30, F35,F40	Unit weight	200Kg

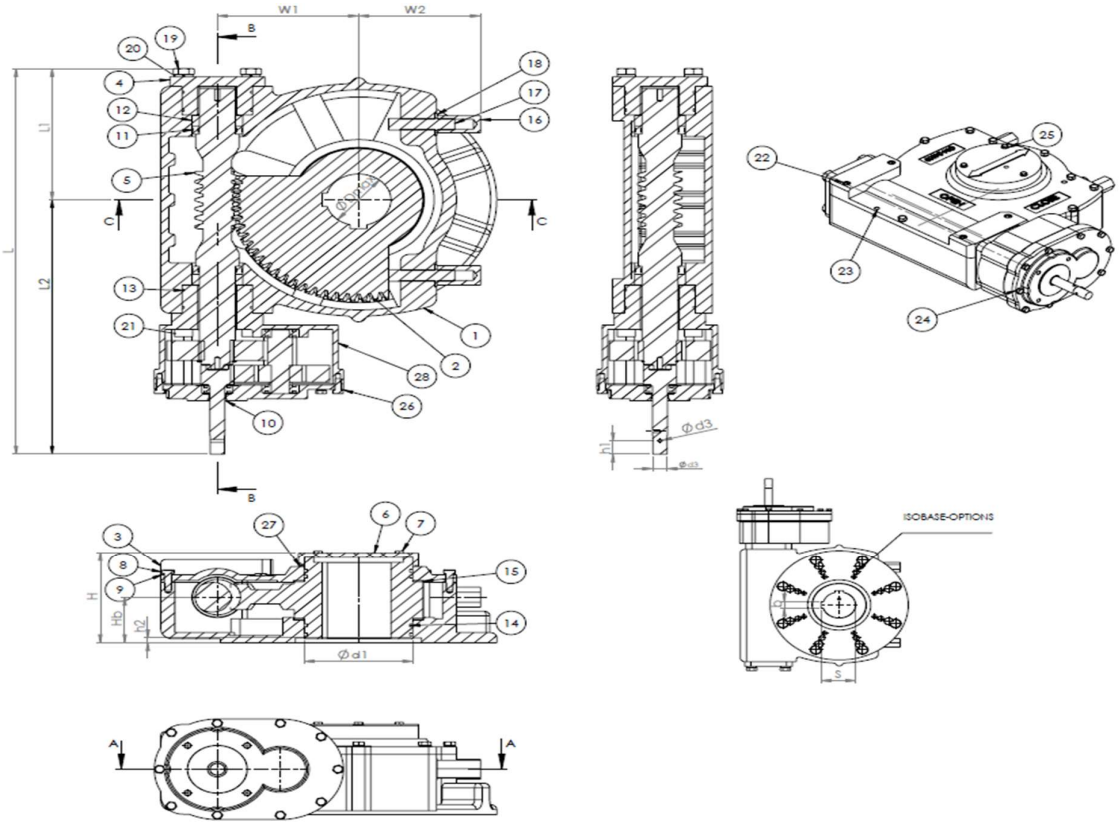

MODEL	L	L1	L2	W1	W2	H	Hb	ΦDmax	$S^{+0.2}$	b	Φd1	h1	Φd2	h2	Φd3	ISO
OM24000	806	274.5	531.5	235	203	189	95	125	132.4	32.18 32.08	181.2 181.1	28	23.90 23.84	5	6	F25,F30,F35,F40

Item	Description	Qty	Material / Standard
1	Housing	1	SG Iron IS:1865 400/15
2	Quadrant	1	SG Iron IS:1865 500/7
3	Top cover	1	SG Iron IS:1865 400/15
4	End cover rear	1	SG Iron IS:1865 400/15
5	Worm shaft	1	BS:970 709M40 COND.R
6	Indicator	1	Carbon Steel
7	Hex Head screws	3	IS:1367 Gr.8.8
8	Hex Head screws	8	IS:1367 Gr.8.8
9	Spring Washer	8	Carbon Steel
10	Oil seal	1	Nitrile rubber
11	Taper roller bearing	2	Stainless steel - 316
12	Spacer	2	SS
13	O Ring-Rear cover	3	Nitrile rubber - 70 Shore
14	O Ring-Quadrant	3	Nitrile rubber - 70 Shore

Item	Description	Qty	Material / Standard
15	Thrust washer	2	Stainless steel – 316
16	Stop nut	2	Carbon steel-DIN6334
17	Hex Socket set screw	8	IS:1367 Gr.10.9
18	Copper washer	2	IS:1367 Gr.8.8
19	Hex Head screws	4	IS:1367 Gr.8.8
20	Spring Washer	4	Carbon Steel
21	Socket head screw	4	ISO-4762
22	Socket head screw	4	ISO-4762
23	Dowel	4	SS
24	Hex Head screws	8	IS:1367 Gr.8.8
25	Plain washer	3	Carbon Steel
26	Spring Washer	8	Carbon Steel
27	O Ring-Indicator	1	Nitrile rubber - 70 Shore
28	Spur-Assembly	1	SG Iron IS:1865 400/15